Related Fluid Power

Cavity: **SN16-4**
Form Tool: 40500019

CAV-SN16-4

16 size, 1 5/16-12 thread, “Super” series

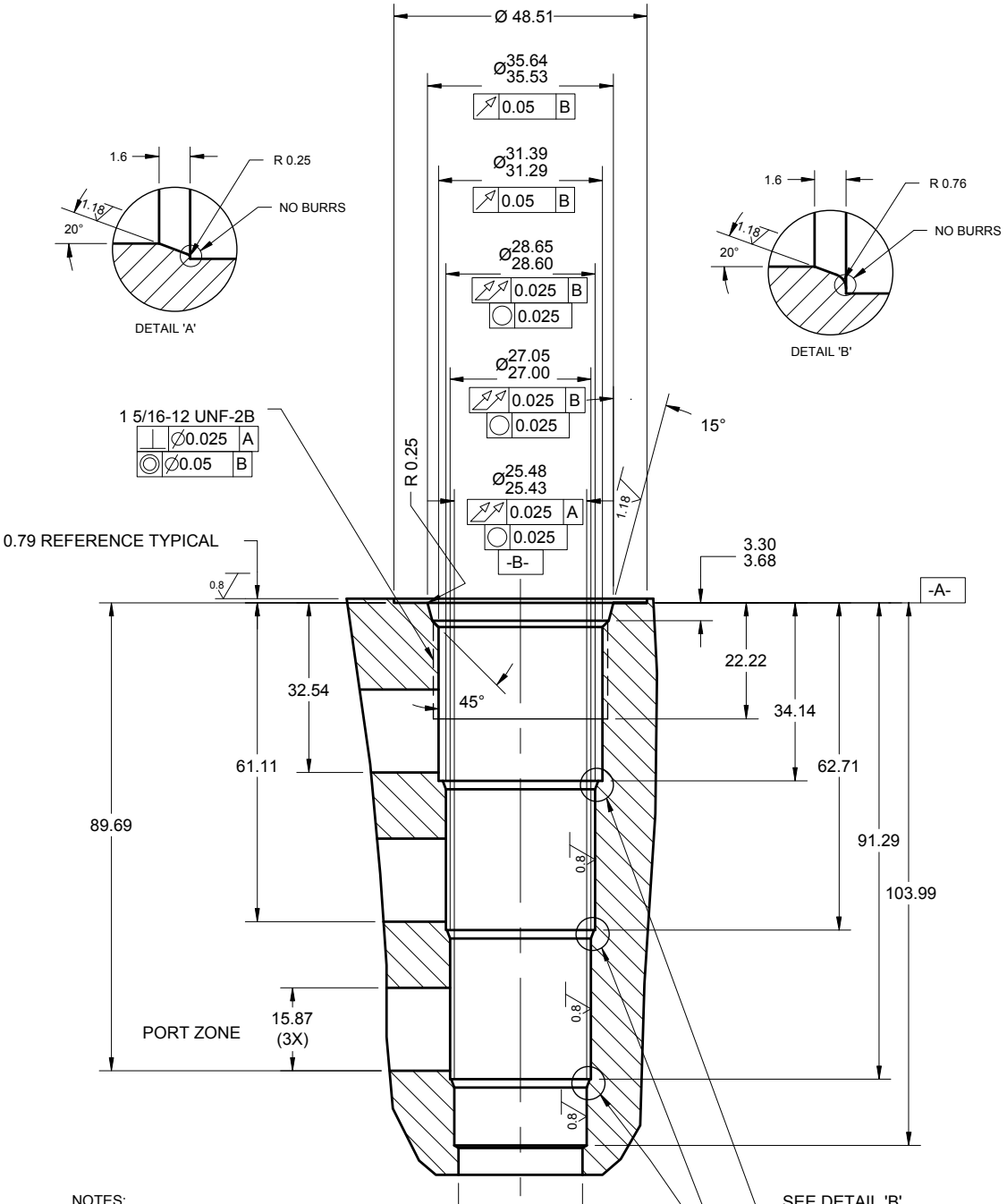

NOTES:

1.) CAVITY CAN BE MACHINED WITH DELTA FORM TOOL #40500019.

2.) ALL MACHINED SURFACES TO BE 0.8 FINISH OR BETTER, EXCLUDING THREADS.

3.) IT IS VERY IMPORTANT THAT VALVE CAVITIES MEET ALL DIMENSIONAL AND QUALITY STANDARDS OF CONCENTRICITY AND PERPENDICULARITY. THREADS MUST BE PERPENDICULAR TO THE SPOTFACE SURFACE. SPOTFACE MUST CLEAN UP TO FULL DIAMETER. IMPROPERLY MACHINED CAVITIES CAN LEAD TO CARTRIDGE MALFUNCTION AND/OR FAILURE FROM DISTORTION.

We reserve the right to change technical specifications and dimensions without giving notice.

Related Fluid Power Ltd. T: 0044 (0)1334 655600 F: 0044 (0)1334 650006 E: sales@relatedfluidpower.com www.relatedfluidpower.com